Input / Output

Input / Output - External Devices; I/O Modules; Programmed I/O, Interrupt Driven I/O; Direct Memory Access; Embedded I/O Systems - Embedded I/O, General Purpose I/O, Serial I/O, Other Peripherals.

I/O module

- I/O module contains logic for performing a communication function between the peripheral and the bus.

Why cannot we connect peripherals directly to the system bus.

The reasons are as follows:

- There are a wide variety of peripherals with various methods of operation. It would be impractical to incorporate the necessary logic within the processor to control a range of devices.
- The data transfer rate of peripherals is often much slower than that of the memory or processor. Thus, it is impractical to use the high-speed system bus to communicate directly with a peripheral.
- On the other hand, the data transfer rate of some peripherals is faster than that of the memory or processor. Again, the mismatch would lead to inefficiencies if not managed properly.
- Peripherals often use different data formats and word lengths than the computer to which they are attached.

- Thus, an I/O module is required. This module has two major functions (Figure 7.1):
  - Interface to the processor and memory via the system bus or central switch
  - Interface to one or more peripheral devices by tailored data links

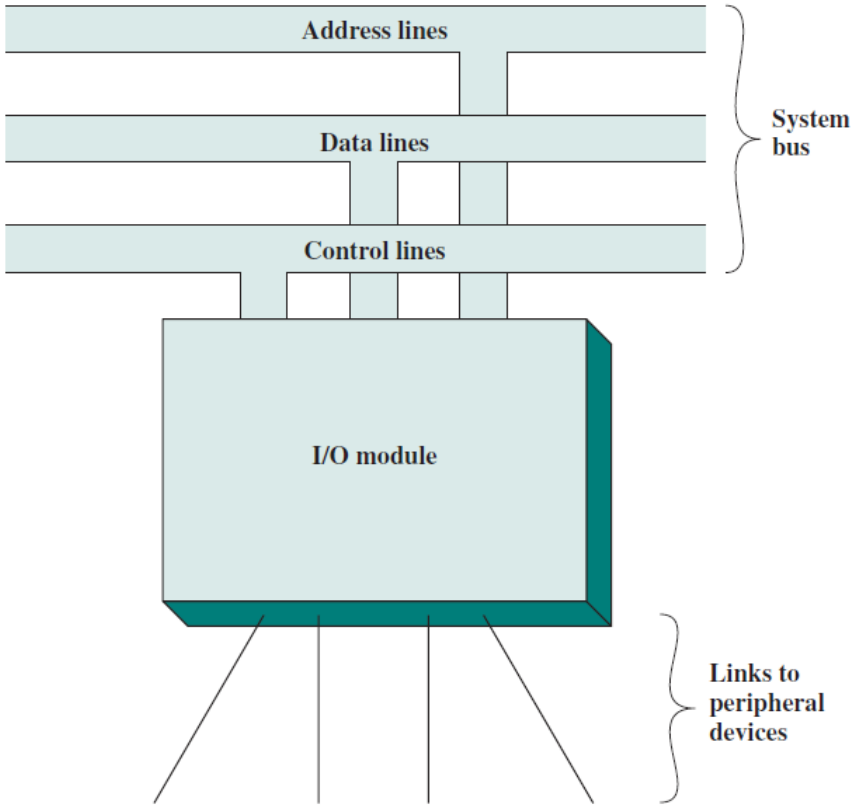

Figure 7.1 Generic Model of an I/O Module

External Devices

- I/O operations are accomplished through external devices
- Provide a means of exchanging data between the external environment and computer.
- An external device attaches to the computer by a link to the I/O module. Fig. 7.1
- This link is used to exchange the control, status and data.
- An external device connected to an I/O module is referred to as peripheral device or a peripheral.
- Categories:
  - Human readable
    - Suitable for communication with computer user
    - E.g. video display terminals, printer, keyboard
  - Machine readable
    - Suitable for communication with equipment
    - E.g. magnetic disk, magnetic tape
  - Communication
    - Suitable for communication with remote devices
    - Modem
    - Network Interface Card (NIC)

- The nature of an external device is indicated in Figure 7.2.
- The interface to the I/O module is in the form of control, data, and status signals.
- *Control signals* determine the function that the device will perform, such as send data to the I/O module (INPUT or READ), accept data from the I/O module (OUTPUT or WRITE), report status, or perform some control function particular to the device (e.g., position a disk head).
- *Data* are in the form of a set of bits to be sent to or received from the I/O module.
- *Status signals* indicate the state of the device. Examples are READY/NOT-READY to show whether the device is ready for data transfer.
- *Control logic* associated with the device controls the device's operation in response to direction from the I/O module.
- The *transducer* converts data from electrical to other forms of energy during output and from other forms to electrical during input.
- A buffer is associated with the transducer to temporarily hold data being transferred between the I/O module and the external environment; a buffer size of 8 to 16 bits is common.

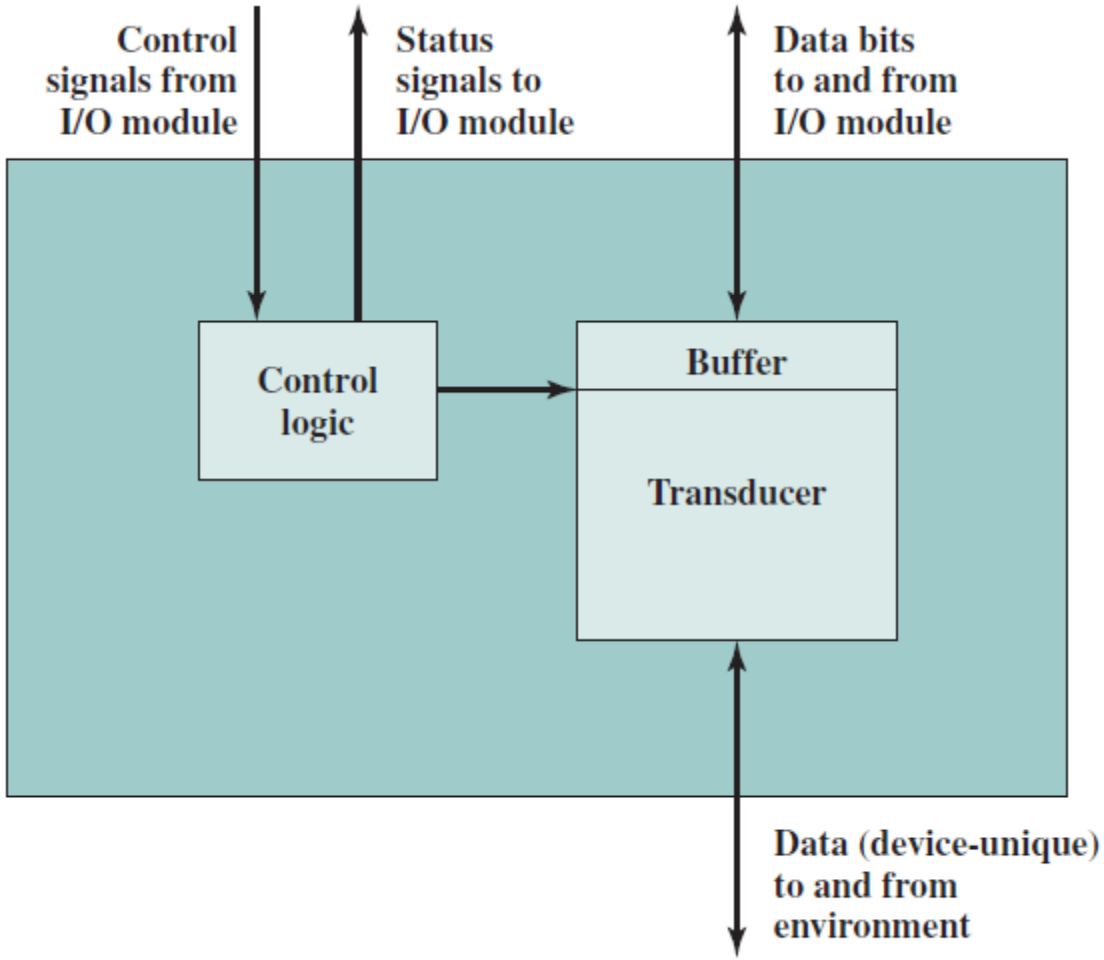

Figure 7.2 Block Diagram of an External Device

Keyboard/Monitor

- The most common means of computer/user interaction is a keyboard/monitor arrangement.
- The user provides input through the keyboard.
- This input is then transmitted to the computer and may also be displayed on the monitor.
- The monitor displays data provided by the computer.
- The basic unit of exchange is the character.
- Associated with each character is a code, typically 7 or 8 bits in length.
- The most commonly used text code is the **International Reference Alphabet** (IRA).
- Each character in this code is represented by a unique 7-bit binary code; thus, 128 different characters can be represented.
- Characters are of two types: printable and control.
- Printable characters are the alphabetic, numeric, and special characters that can be printed on paper or displayed on a screen.
- Some of the control characters have to do with controlling the printing or displaying of characters; an example is carriage return.
- Other control characters are concerned with communications procedures.

- For keyboard input, when the user depresses a key, this generates an electronic signal that is interpreted by the transducer in the keyboard and translated into the bit pattern of the corresponding IRA code.
- This bit pattern is then transmitted to the I/O module in the computer.
- At the computer, the text can be stored in the same IRA code.
- On output, IRA code characters are transmitted to an external device from the I/O module.
- The transducer at the device interprets this code and sends the required electronic signals to the output device either to display the indicated character or perform the requested control function.

Disk Drive

- A disk drive contains electronics for exchanging data, control, and status signals with an I/O module plus the electronics for controlling the disk read/write mechanism.
- In a fixed-head disk, the transducer is capable of converting between the magnetic patterns on the moving disk surface and bits in the device's buffer (Figure 7.2).
- A moving-head disk must also be able to cause the disk arm to move radially in and out across the disk's surface.

I/O Modules

Module Function

- The major functions or requirements for an I/O module fall into the following categories:
  - Control and timing
  - Processor communication
  - Device communication
  - Data buffering
  - Error detection
- During any period of time, the processor may communicate with one or more external devices in unpredictable patterns, depending on the program's need for I/O.
- The internal resources, such as main memory and the system bus, must be shared among a number of activities, including data I/O.
- Thus, the I/O function includes a **control and timing** requirement, to coordinate the flow of traffic between internal resources and external devices.

Control and timing

- The processor may communicate with external devices and the internal devices (memory, system bus) must be shared among a number of activities, including data I/O.
- Thus, the I/O function includes a control and timing requirement, to coordinate the flow of traffic between the external and internal devices.
- I/O Steps
  - CPU checks the I/O module device status.
  - I/O module returns status.
  - If ready, CPU requests data transfer
  - I/O module gets data from device
  - I/O module transfers data to the CPU.

Processor communication

- I/O module must communicate with the processor and the external device.
- Processor communication involves the following:
  - **Command decoding**: The I/O module accepts the command from processor, sent as signal on the control bus.
  - **Data:** Data exchanged between processor and I/O module over the bus.
  - **Status reporting:** Because peripherals are so slow, it is important that the processor needs to know the status of the I/O module. (BUSY or READY)
  - **Address recognition:** I/O module must recognize the unique address for each peripheral it controls.

Device Communication

- This involves commands, status information and data.

Data buffering

- Whereas the transfer rate into and out of main memory or the processor is quite high, the rate is orders of magnitude lower for many peripheral devices and covers a wide range.
- Data coming from main memory are sent to I/O module in rapid burst.
- The data are buffered in I/O module and then sent to the peripheral devices.
- Data are buffered so as not to tie up the memory in a slow transfer operation.
- Thus, the I/O module must be able to operate at both device and memory speeds.

Error detection

- Reporting error to the processor.
  - Mechanical and electrical malfunctions reported by the device. (Eg. bad disk track, paper jam)
  - Unintentional changes to the bit pattern while transmission from device to I/O. Some form of error-detecting code is often used to detect transmission errors. A simple example is the use of a parity bit on each character of data.

I/O Module Structure

- I/O modules vary considerably in complexity and the number of external devices that they control.
- We will attempt only a very general description here. (One specific device, the Intel 82C55A, is described in Section 7.4.)
- Figure 7.3 provides a general block diagram of an I/O module.
- The module connects to the rest of the computer through a set of signal lines (e.g., system bus lines).
- Data transferred to and from the module are buffered in one or more data registers.
- There may also be one or more status registers that provide current status information.

- A status register may also function as a control register, to accept detailed control information from the processor.
- The logic within the module interacts with the processor via a set of control lines.
- The processor uses the control lines to issue commands to the I/O module.
- Some of the control lines may be used by the I/O module (e.g., for arbitration and status signals).
- The module must also be able to recognize and generate addresses associated with the devices it controls.
- Each I/O module has a unique address or, if it controls more than one external device, a unique set of addresses.
- Finally, the I/O module contains logic specific to the interface with each device that it controls.

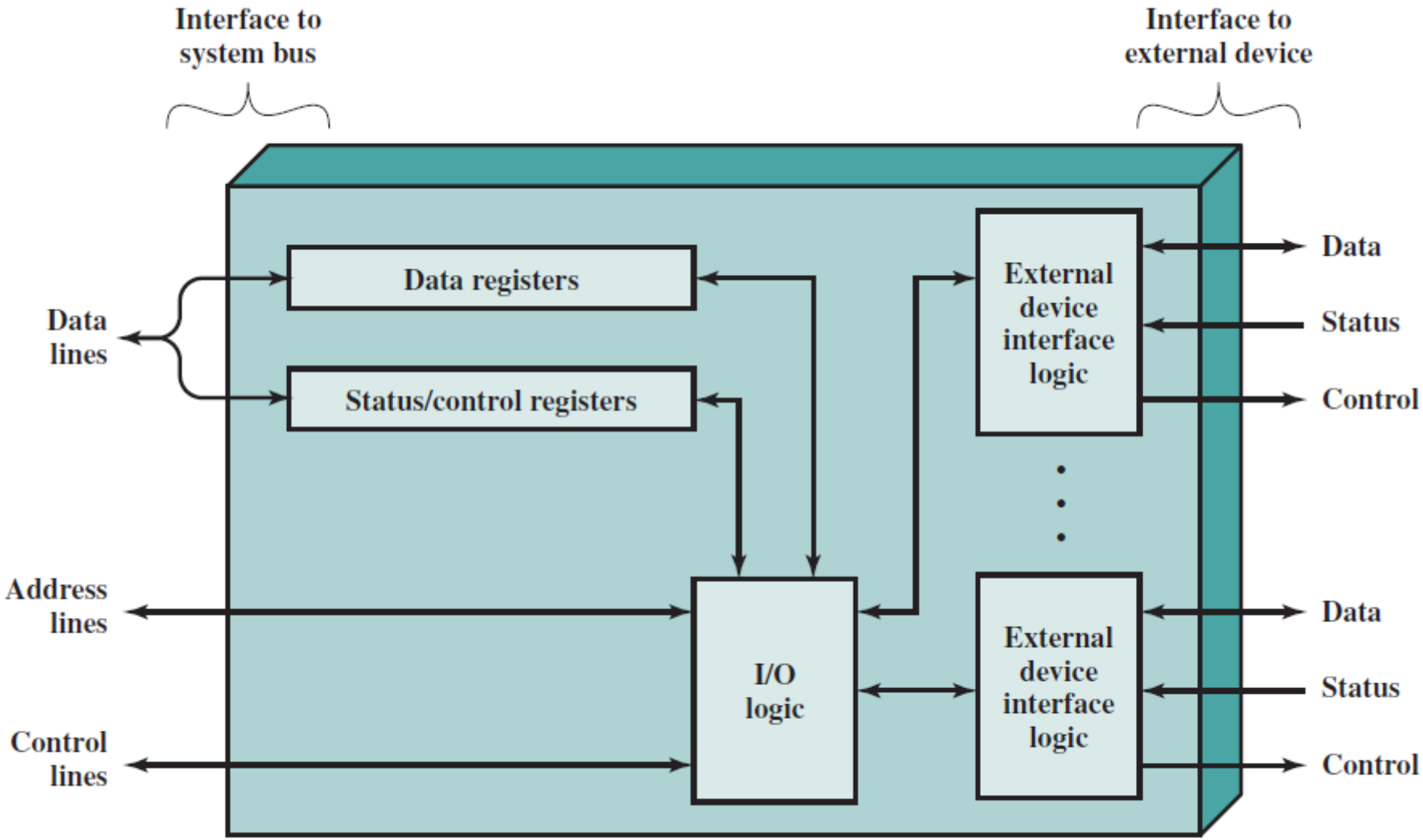

Figure 7.3 Block Diagram of an I/O Module

- An I/O module functions to allow the processor to view a wide range of devices in a simple-minded way.
- The I/O module may hide the details of timing, formats, and the electromechanics of an external device so that the processor can function in terms of simple read and write commands, and possibly open and close file commands.
- An I/O module that takes on most of the detailed processing burden, presenting a high-level interface to the processor, is usually referred to as an *I/O channel* or *I/O processor*.
- An I/O module that is quite primitive and requires detailed control is usually referred to as an *I/O controller* or *device controller.*
- I/O controllers are commonly seen on microcomputers, whereas I/O channels are used on mainframes.